poppin. work happy.

the soft-spot

Max Task Chair

ASSEMBLY INSTRUCTIONS

Designed by Poppin in NYC

INCLUDED IN THE BOX

SEAT

CASTER BASE

PNEUMATIC CYLINDER

ASSEMBLY

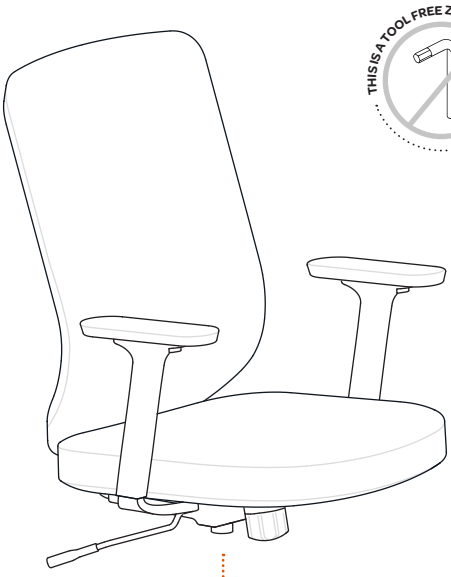

1 STEP ONE

Insert the pneumatic cylinder into the center of the base.

2 STEP TWO

Place the seat on top of the pneumatic cylinder.

Tada! Done.

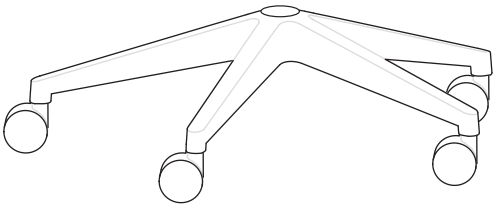

BELLS + WHISTLES

Ready to roll!

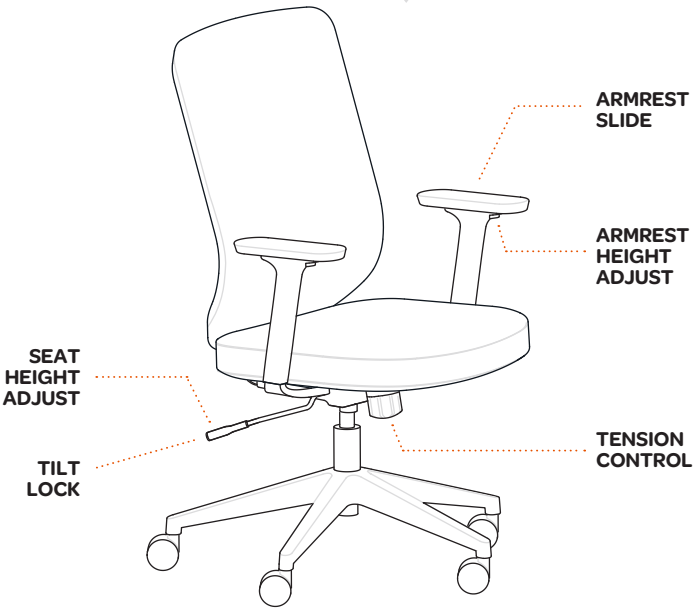

ABOUT POPPIN

Poppin's furniture and office supplies are designed with your success in mind. From a day-brightening Stapler to a game-changing Desk System, Poppin is the one-stop shop for creating inspiring, modern workspaces.

CARE

Doing a little dirty work? Soak up the spill and then blot with warm water + mild soap.

100% WORK HAPPINESS GUARANTEE

For full warranty details, visit poppin.com

WARNING/DISCLAIMER

Listen up, daredevils! (And anyone trying to reach that top shelf). Do not stand on this product. Use only as intended. Failure to follow these instructions could result in property damage or personal injury.

Shop the complete collection at
poppin.com

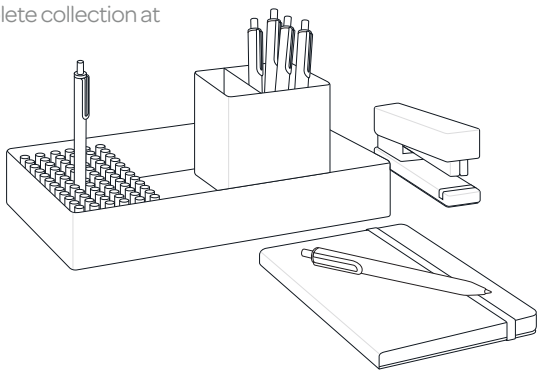

Poppin, Inc.

888-676-7746
poppin.com/contact
#workhappy @poppin

For patent or patent application information visit poppin.com/patents

©Poppin 2015

101885_INSTR_001